www.ancar-online.com

ancar

Ortho

Aluminium Core

ancar

Volta dels Garrofers, 41-42
Pol. Ind. Els Garrofers
08340 Vilassar de Mar
Barcelona, SPAIN

T. (34) 93 754 07 97
ancar@ancar-online.com
www.ancar-online.com

Welcome to Ancar

Industrial tradition since 1958

At ANCAR our working philosophy is very clear: to design the best dental equipment to meet the demands of professionals. To achieve this we base everything we do on six values that characterise all our creations: value, economy, technology, design, flexibility and the human factor.

These pillars, along with hard work and a desire to be the best we can be, mean that every day we take on new challenges and expand our product portfolio with the most innovative technological advancements.

Our beginnings date back to 1958, but the year that marked a real turning point for ANCAR was 1988, the year in which we presented our first dental unit: the Pyrinee model. Back then, we could not have foreseen or dreamed of the growth and importance that ANCAR would come to gain on the international scene 30 years later.

Getting here hasn't been easy, but thanks to values like determination, patience and humility, we have managed to become established and earn the recognition of a demanding and competitive market. We have laid the foundations of a brand that has consolidated itself and is highly renowned in 32 countries around Europe, the Middle East, Oceania and the Maghreb.

At ANCAR we are aware of what dentists and their patients need and we design our products to fulfil all the essential requirements.

Thanks to this methodology, we are able to create reliable and long-lasting dental equipment, manufactured with quality materials and honing in on improving ergonomics through the latest technologies.

The success of Ancar throughout these 60 years of history is not down to one single person: Everyone deserves acknowledgement! Only a loyal, honest and professional team is capable of justifying our experience and guaranteeing our future.

Antoni Carles Bosch
President

"This is our history, this is our philosophy, this is our commitment".

Antoni Carles Bosch
President

www.ancar-online.com

Ortho Series

Reliable, Solid and Simple

EXCELLENCE IN ORTHODONTICS

Welcome to our catalogue featuring our state-of-the-art orthodontic dental units, where precision meets innovation to elevate dentists' surgeries to new heights. Among the variety of options available, Ancar stands out as the pinnacle of excellence in orthodontic care.

Dental professionals face the task of selecting equipment that not only meet their clinical needs but also improve the patient's comfort and the results of the treatment. The Ortho and Ancar units exceed expectations on all fronts. Known for their advanced technology, ergonomic design and unwavering reliability, Ancar offers a perfect combination of functionality and sophistication.

With our dental units, dental professionals achieve incomparable precision and control during procedures, guaranteeing optimal results for each patient. Design with the maximum attention to detail, these units prioritise both the doctor's and the patient's comfort, facilitating efficient work flows and enhancing the overall dentist experience.

In a rapidly evolving field where precision and efficiency are key, choosing Ancar orthodontist units is not just a preference: it's a commitment to excellence. Discover the difference Ancar can make in your surgery and elevate your treatments to unparalleled heights.

ancar

SD-60

Ancar-3250

Ancar-3200

Ancar-3100

Ancar-3000

Sd-60

Orthodontics with style

Treatment unit for orthodontics

The SD-60 unit is the most elementary and ingenious way of equipping your surgery, especially suitable for orthodontist practices.

An affordable investment that offers an orthodontist unit with the best features, material quality, safety, precision, functionality, ergonomics and hygiene.

ancar

Ancar-3250

Ambidextrous dental unit

Ambidextrous treatment unit without cuspidor

The A-3250 dental unit is designed to offer optimal flexibility thanks to its ambidextrous design, making it ideal for orthodontics, hygienists, as well as general dentistry. Its versatility and ergonomics make it perfectly suited for all types of practitioners, ensuring comfort and efficiency during every procedure.

Ideal applications

- Oral hygiene
- Orthodontics
- General dentistry

Advantages

- Ambidextrous: Suitable for both right- and left-handed users, ensuring maximum comfort and smooth movements.
- Versatile: Perfect for orthodontics, oral hygiene care, and general dentistry.
- Advanced ergonomics: Intelligent instrument positioning to minimize effort and prevent musculoskeletal disorders.
- Ease of use: Intuitive and accessible controls for quick handling and improved productivity.
- Reliability and durability: High-quality materials ensuring long lifespan and reduced maintenance.

Features of the Ancar-3250

- Number of instruments: 4 or 5 stations (depending on configuration) with or without integrated operatory light (your choice).
- Suction: Two suction hoses included.
- Instrument tray: Height-adjustable for maximum accessibility.
- Control panel: Button-operated with intuitive, easy-to-locate controls for fast and efficient use.
- Operatory light: Integrated into the chair or ceiling-mounted, according to your preference.

ancar

Ancar-3200

Designed for right and left-handed users

Ambidextrous treatment unit without spittoon

The Ancar 3200 orthodontic unit responds to all your needs. The ergonomic design allows a wide variety of movements and ensures you are able to work comfortably in every position.

Versatility and functionality at the highest level guarantee the well-being of patients and optimization for orthodontic treatments.

ACCESSORIES

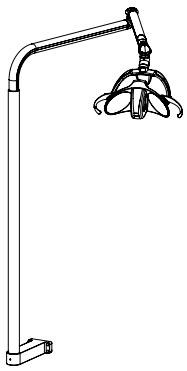

Lamp column kit.

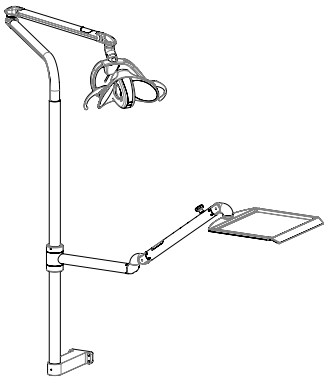

Lamp column kit
+ instrument tray.

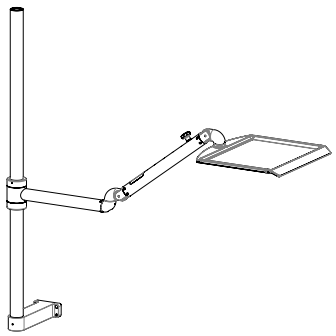

Column kit
+ instrument tray.

Possibility of adding an extra instrument support and having 5 supports.

ancar

Ancar-3100

Dental chair with integrated suction

The A-3100 dental chair features an ambidextrous design to accommodate both right- and left-handed users, ensuring comfort and great flexibility in all movements. With the suction hoses integrated directly into the chair, the unit facilitates the practitioner's work while offering high versatility. Ideal for hygiene care, orthodontics, or examinations, it can also be combined with a mobile cart or used for surgery and other specialized treatments.

Ideal applications

- Oral surgery
- Oral hygiene
- Orthodontics

Advantages

- Ambidextrous: Suitable for both right- and left-handed users for optimal use.
- Integrated suction: Quiet and efficient system built into the chair, reducing clutter and improving maneuverability.
- Optimal comfort: Ergonomic chair with precise adjustments for ideal patient positioning.
- Durability: High-quality materials ensure long-lasting reliability.

ancar

Ancar-3000

Comfortable for you, comfortable for your patients

Surgery chair

The features of the A-3000 have not been designed with just the professional in mind. With the patient in mind, we have strived to offer them the maximum comfort throughout their entire treatment.

All units in Ortho Series have gained in comfort thanks to their two types of upholstery: “Standard” and “Soft”. Their headrest adjusts to any height, including children’s, enabling optimal and comfortable working conditions. Additionally, all chair positions can be adjusted using the pedal. An optional right side armrest can be added. They are equipped with safety devices in the base and the backrest to prevent sudden movements and guarantee the maximum reliability in all interventions.

ancar
WE CARE ABOUT YOU
www.ancar-online.com

Ortho Series

Details that make the difference

ALUMINIUM CORE

Manufactured in light anti-corrosion aluminium alloy.

ancar

State-of-the-art and highly robust technical and mechanical solutions.

Optional suction hose selection system.

Removable spittoon cup and autoclave.

Tap detachable from cup for more conformable cleaning.

Anti-corrosion aluminium hydric unit with 70º rotation.

Door with Tip-on system offering easy access to the interior.

Ortho Series

Personalise the unit to suit you

Bottle system "Self Water System"

Independent water supply system for the equipment instruments.

Ideal for guaranteeing continuous cleaning of the instrument water circuit.

The equipment water circuit has been designed so the water cannot return due to loss of pressure. This prevents water used for different purposes from getting mixed together, thereby impeding cross contamination with the water from the public water supply and vice versa.

Possible for SD-60 and Ancar 3200 units

ancar

Amalgam disinfection and recovery systems

Suction hose disinfection

H1

- H1 system for continuous cleaning and complete disinfection of the suction system.
- Does not require additional manual disinfection.
- The H1 includes the automatic suction hose selection system.

Amalgam recovery

TYPE-1

CAS-1

- Systems to recover amalgam and separate conduits for air and water with a selection valve for dry or wet suction.

LED lamps

The new generation of high-performance LED lamps have quite a few advantages:

LED lights generate natural light that improves the clarity provided by halogen light, a wider field of vision, fewer shadows during treatment and whiter cold light.

LED lights have a longer service life than halogen bulbs, generate minimal heat and consume very little energy.

TECHNICAL CHARACTERISTICS	FARO EVA	FARO MAIA	G.COMM POLARIS
Light source	2 LED	2 LED	10 LED
Colour temperature (ºK)	between 2,700 K and 5,700 K	5,000 K	between 4,200 K and 5,800 K
Brightness (lux)	between 11,000 and 50,000 lux	between 3,000 and 35,000 lux	between 8,000 and 35,000 lux
Colour rendering index (CRI)	> 95	85	> 85
Lighted area (mm)	190 x 100	170 x 85	140 x 70
Electrical supply	24 VAC 50/60 Hz	17-24 VAC 50/60 Hz	12-24 VAC 50/60 Hz
Consumption	24 VAC 26 VA / 32 VDC 14 VA	9 VA	29 VA
Warranty	24 months	12 months	24 months
Certificate in accordance with the directive	93/42 CE Class I	93/42 CE Class I	93/42 CE Class I

Imaging systems

LCD 22” monitor, 24 VDC, high resolution (1280 x 1024). Durable, versatile and high-performance screen with a wide range of integrated video options, designed specifically for odontologist settings. Optical, anti-glare glass and metal casing.

“Faro” arm for the LCD monitor with a dual rotary shaft and vertical tilting.

Possibility of configuring your dental unit with different INSTRUMENTS from major brands:

Syringes

LUZZANI DENTAL

Polymerize Lamp

acteon

Micromotors

Bien Air Dental

NSK

Scalers

EMS

NSK

acteon

Turbines

Compatible with all brands.

Auxiliary trays

Tray on the auxiliary support.

Ancar UNI Tray

Stools

Possible to upholster in every available color within our color range.

Td 600

Td 700

Td 800

Optional right side armrest

180º rotation

Headrest and backrest

Standard headrest

Included in the standard equipment, option to upgrade to 3D movable headrest.

Multi-positional articulated headrest with vertical movement.

Headrest with 3D movement

Ergonomic headrest with 3D spherical movement and air or manual brake (optional).

Multi-positional headrest with vertical and lateral double articulation movement.
Air or manual brake option.

"Standard" range upholstery colours:

400 Yellow | 405 Purple | 410 Pastel Blue | 425 Silver Grey | 435 Pearl Black | 440 Pastel Green | 445 Pearl Green | 455 Pearl Blue | 470 Dark Blue | 475 Garnet | 480 Gold

The SOFT range contains the following colours (optional):

810 BLACK | 820 GRANITE | 845 ASH | 901 CAMEL | 906 HAVANA | 844 COFFEE | 837 DARK BLUE | 838 SPARKLING BLUE | 839 TURQUOISE

904 AQUA | 902 OLIVE | 905 FOREST GREEN | 843 BAMBOO | 842 CORN | 903 BURGUNDY | 841 CARMIN | 849 FUSHIA | 907 MARBLE

Ortho Series

Technical characteristics

ancar

Functions

• Electric chair with Trendelenburg position and 5 memory settings (three working positions, start and return to spittoon).

• Pedal to control chair movements and instrument activating via lever.

• Speed selector for micromotor from 0 to 4000 rpm. (Selective) and from 0 to 40 000 rpm (Global).

• Individual control of water flow for each instrument.

• Selection of micromotor reversal and ultrasound power level.

• Automatic on/off light setting in reclined position and return to spittoon position.

• 3F syringe installed by default.

• Optional quick connection kit: integrated USB 2.0 port + air/water input + 230 V output.

• Electrical micromotor controlled via potentiometer.

Ergonomics

• Minimum chair height of 400 mm, which facilitates intervention in upper parts.

• Multi-position articulated headrest.

• Chair movements operated by the control pedal or the keypad (main and auxiliary).

• Additional tray for small hand instruments.

• Hydric box with 70º rotation to facilitate auxiliary work.

• Ergonomic headrest at the same level as the optional backrest.

Materials

• ALUMINIUM CORE: unit, chair and pedal made in light anti-corrosion aluminium alloy.

• Hydric box lids in ABS and front cover of connection box in special highly impact resistant Baydur® polyurethane.

• Large capacity porcelain spittoon cup.

• Upholstery of high quality, hygienic, flame retardant, permeable to steam and air, highly elastic and smooth to the touch.

Safety features

• In auxiliary hose, backrest and chair base.

• In movement keys.

• In optional movements (turbine, micromotor and ultrasound) through the regulation pedal.

Hygiene

• Removable and thermo-disinfectable suction hoses.

• Easy-to-clean suction filter.

• Fewer joints and corners for easier cleaning.

• Optional: “H1” system for disinfecting suction hoses.

• Removable spittoon cup and autoclave at 135º.

Ortho Series

Dimensions and technical details

Technical Details

Voltage	220 - 240 V~
Frequency	50 Hz
Air pressure	5.5 Bar
Water pressure	3 Bar
Maximum power consumption	900 W
Type of electrical protection	I
Type of operation	Intermittent
Maximum load capacity (patient)	160 kg
Electrical micromotor Instrument	24 V CC / 65 W
Micromotor Instrument MX	24 V CC / 60 W (130 W peak)
Instruments light bulb	3 V – 7 V / 2.5 W
Ultrasound	24 V CA / 35 W
Curing light	24 V CA / 150 W
3F syringe	
Type of insulation	Type B
Type of dental unit	Electro-pneumatic
Type of installation	Permanent
Main fuse	6.3 A / 250 V
Movement card fuse	T 32 mA / 250 V
Primary transformer fuse 9015093 PCB	TT 2.5 A / 250 V
24 V CA protection wire (yellow/yellow)	Polyswitch RUE600
17 V CA protection wire (red/red)	Polyswitch RUE600 + RUE185
24 V CA auxiliary outlets	4 x hydric box 1 x connections box
Suction connection	500 W / 230 V Relays 20 A / 250 V
AUX potential free contact in connections card	Max. 250 V / 5 A

ancar

Dimensions

SD-60

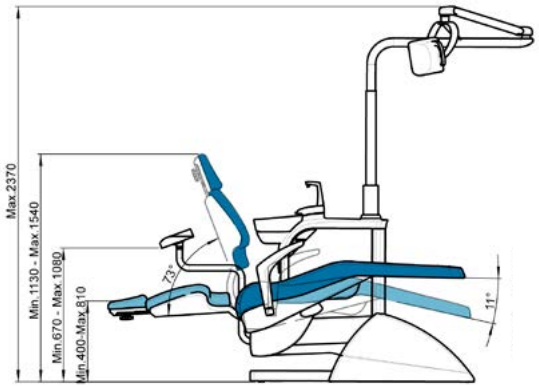

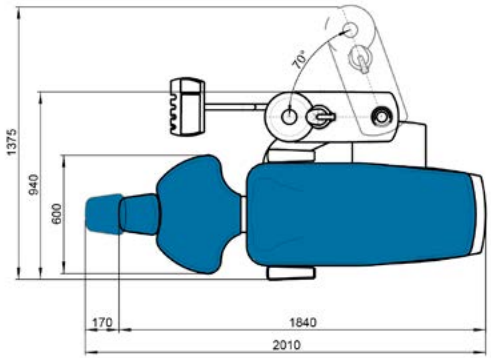

A-3100

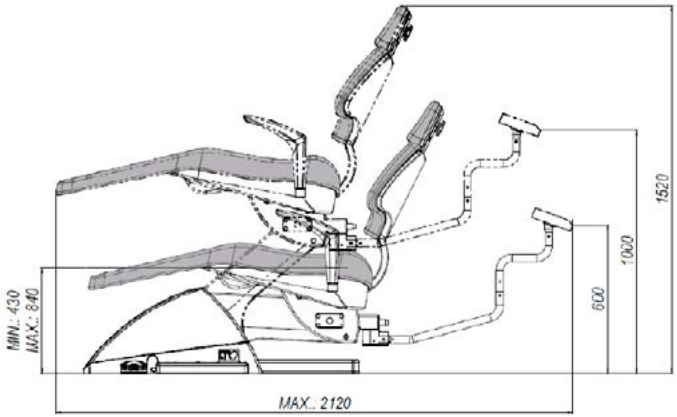

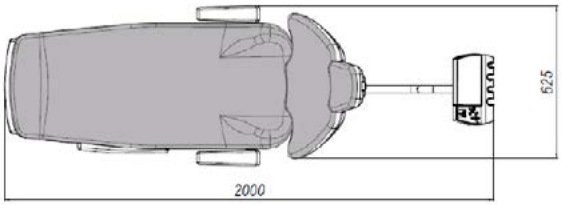

A-3200

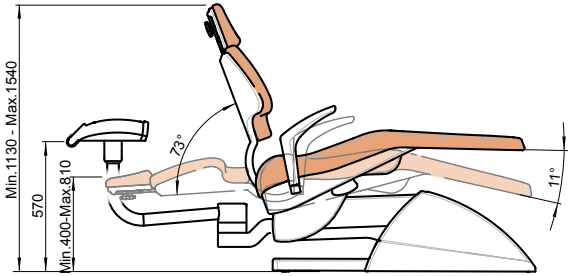

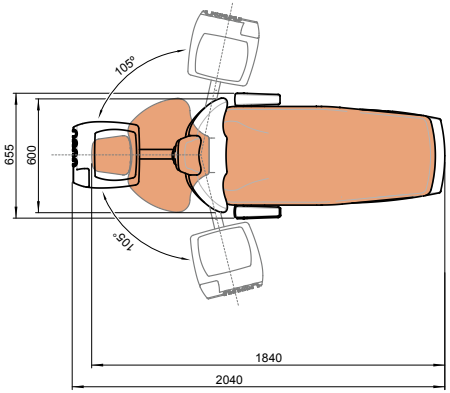

A-3250

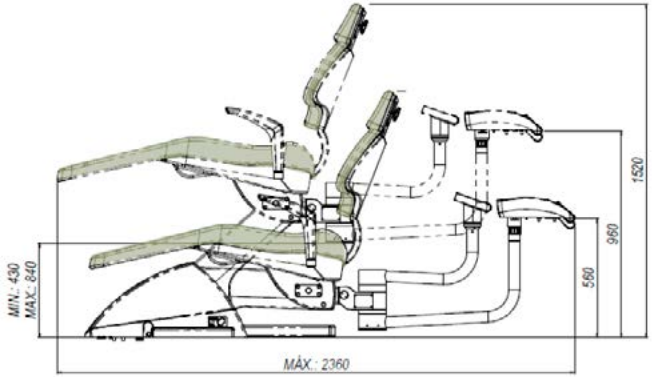

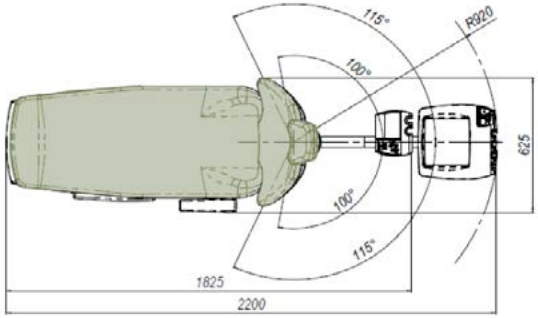

ancar

Rooted in Tradition, Driven by Technology, Crafted with Care

www.ancar-online.com

QS4 LEA OR 302

Subject to changes in design and/ or specifications without prior notice. Manufactured in Europe. October 2025.

Management System EN ISO 13485:2016

TÜVRheinland CERTIFIED

www.tuv.com ID 9000006088

ancar

Volta dels Garrofers, 41-42
Pol. Ind. Els Garrofers
08340 Vilassar de Mar
Barcelona, SPAIN

T. (34) 93 754 07 97
ancar@ancar-online.com
www.ancar-online.com